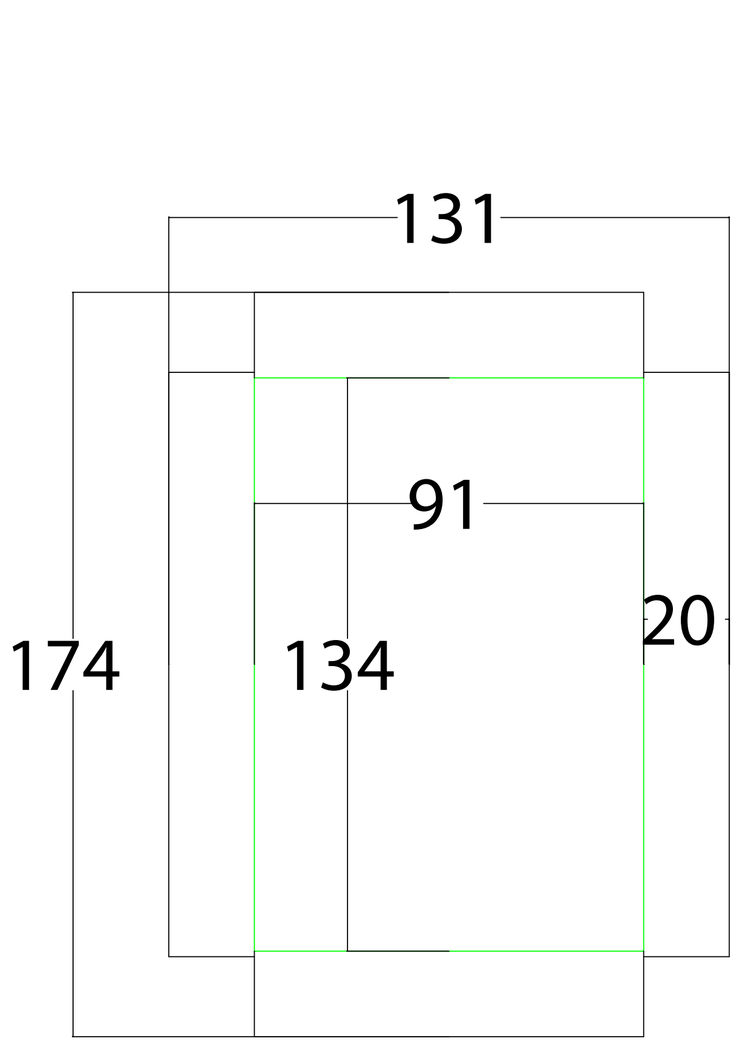
131
91
174
134
20

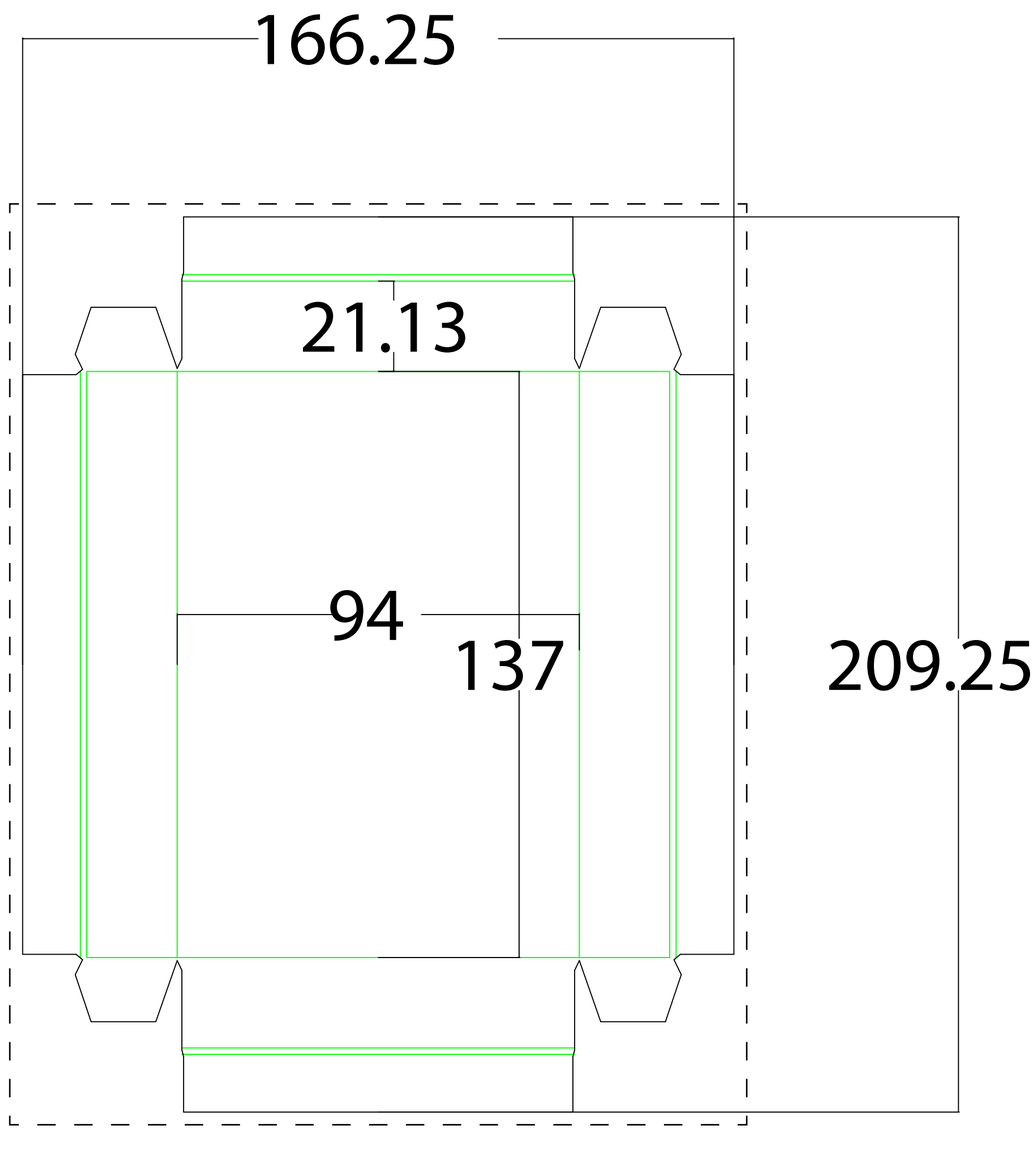
166.25
21.13
94
137
209.25

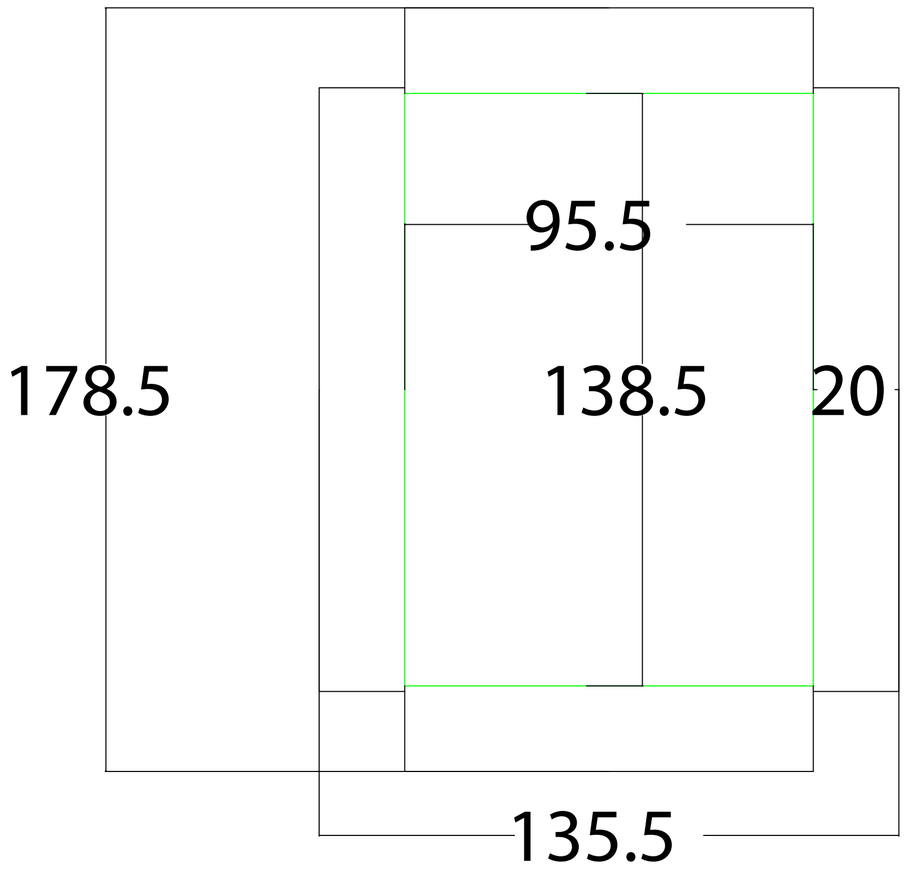
95.5
178.5
138.5
20
135.5

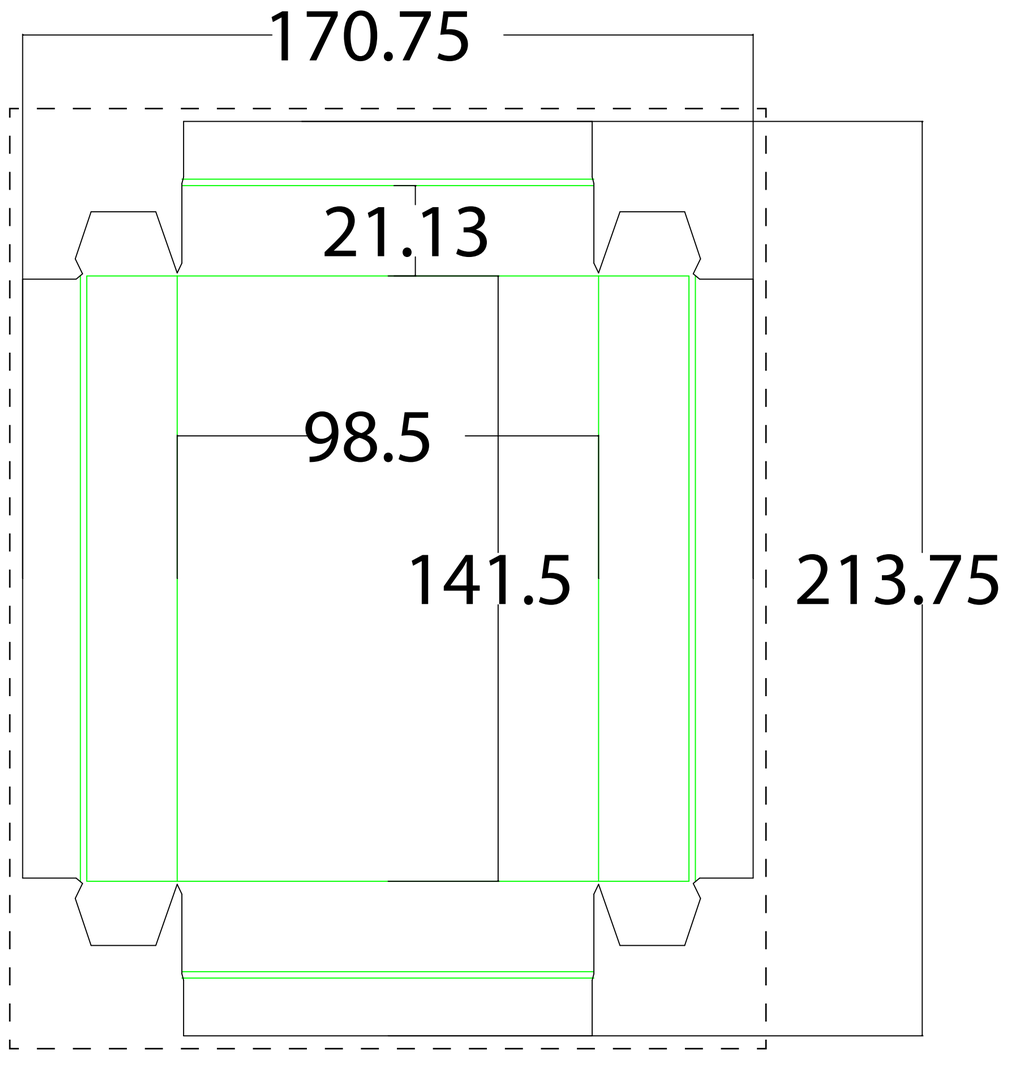
170.75
21.13
98.5
141.5
213.75